SPECIFICATION

1. Pressure rating : 3000 psig (206bar) @ 70°F(21℃)
2. Temperature rating
 : 50°F ~ 150°F (10℃ ~ 260℃) with PTFE seat and Packing

NO.	DESCRIPTION	MATERIAL	Q'TY	REMARK
1	BODY	A276-316	1	
2	BALL STEM	A276-316	1	
3	SEAT	PTFE	2	
4	SIDE RING	A276-316	2	
5	LOWER PACKING GLAND	A276-316	1	
6	PACKING	PTFE	1	
7	UPPER PACKING GLAND	A276-316	1	
8	PACKING BOLT	A276-316	1	
9	LOK NUT	A276-316	1	
10	HANDLE	NYLON	1	

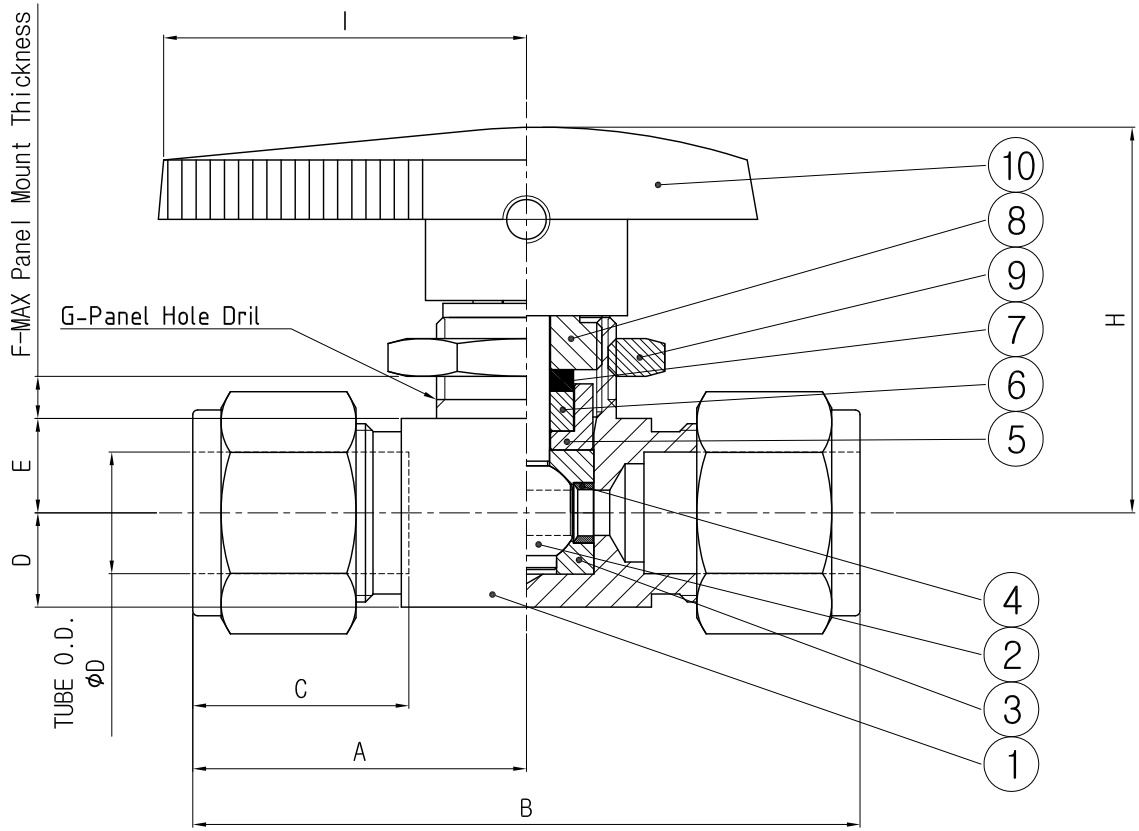

A	27.JUN.19	Issued for Approval	K.M.LEE	K.J.JAE	J.H.LIM
Rev.	Issue Data	Description	Originator	Checked	Approved

PURCHASER	SUPERLOK USA
CLIENT	-
PROJECT NAME	-
	-
PROJECT NO.	-
PO. NO.	-
MFR. MODEL/TYPE	SBV120 SERIES
VALVE NAME	ONE PIECE BALL VALVE
DRAWING NO.	190626-01-122
GENERAL ARRANGEMENT DRAWING for VALVE	BMT Co., Ltd.

NO.	PART NO.	ORIFICE	TUBE O.D ΦD, Inch	END CONNECTION		Dimension, mm									REMARK
				INLET	OUTLET	A	B	C	D	E	F	G	H	I	
1	SBV120H2-S8	4.8	1/2"	1/2" SUPERLOK		35.4	70.7	22.9	10.0	10.0	4.8	19.8	40.8	38.5	